Preliminary Steps:

1. Read all instructions carefully before installing the LED bar
2. Check with state and local authorities for laws governing usage and proper mounting of auxiliary lights
3. Disconnect ground connection from battery (marked "-") to avoid accidental short circuits before attempting to connect electrical wires
4. Route new wires along existing wiring, tape if necessary to correct slack
5. When running wires through the firewall, keep them away from moving parts

Driving light & DRL (2 pole DTP):

Black: Ground "-"
Red: Driving light "+"

DRL and strobe (4 pole DT):

White: DRL, white color "+"
Yellow: DRL, yellow-orange color "+"
Green: Warning light "+"
Blue: Signal line "+"

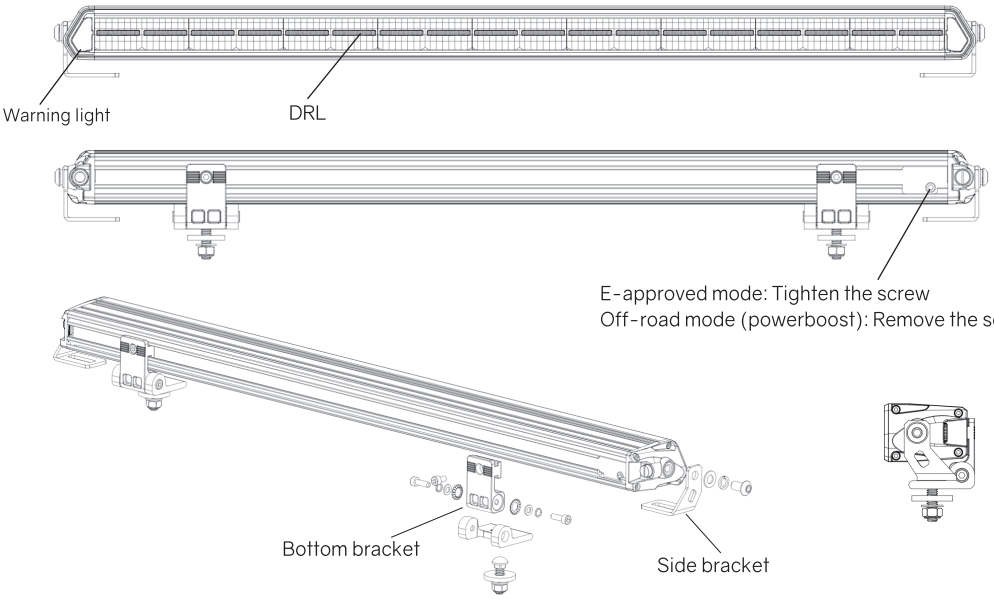

Flash pattern change:

After the signal line (blue cable) is connected, it will automatically switch flash patterns

Flash patterns:

1. Single flash synchronization: 2.2HZ
2. Single flash asynchronous: 2.2HZ
3. Triple flash synchronization: 1.1HZ
4. Triple flash asynchronous: 1.1HZ
5. Quadruple flash synchronization: 1.25HZ
6. Quadruple flash asynchronous: 1.25HZ
7. Combination of one long and five short synchronization: 0.83HZ
8. Combination of one long and five short asynchronous: 0.83HZ
9. Burst flash synchronization: 10HZ
10. Burst flash asynchronous: 10HZ

Warning:

1. Works under the specified voltage (DC9-36V)
2. This LED-bar becomes hot under continuous use - do not remove or touch the casing for at least 30 minutes after turning the light off
3. Keep heat-sink clean and exposed to maintain air flow