THIS DRAWING IS UNPUBLISHED. RELEASED FOR PUBLICATION APRIL , 2002.
DIFFUSION RESTREINTE AMP
© COPYRIGHT 2002 BY TYCO ELECTRONICS CORPORATION. ALL RIGHTS RESERVED. TOUS DROITS RESERVES.

LOC	DIST
EK	00

REVISIONS

P	LTR REV	DESCRIPTION MODIFICATIONS	DATE	DWN DESS.	APVD APP.
	A4	SEE EC EW00 0277 02	22OCT02	SK	BR

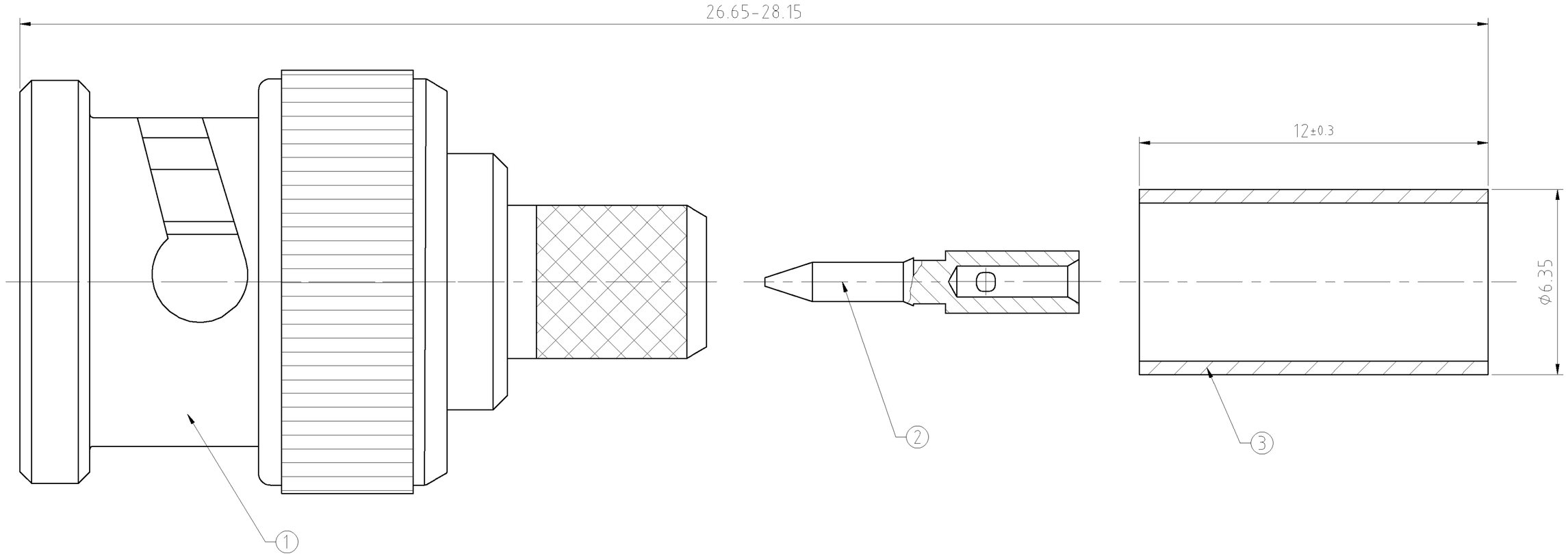

STRIPPING DIMENSIONS

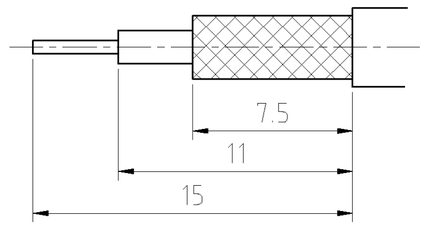

1 COAX CONNECTOR COMPLIES WITH SPEC CECC 22120

2 1 COAX PLUG (POS. 1) ASSEMBLED, WITH MALE CONTACT (POS. 2), WITH FERRULE (POS. 3) PACKED IN PLASTIC BAG

3 BULK PACKAGE 2x100 PCES

4 PLATING: Ni

5 PLATING: MIN. 0.1µm Au OVER Ni

6 CABLE RA7000

7 HAND CRIMPING TOOL FOR MALE CONTACT (POS. 2) (HEX 1.72) AND FERRULE (POS. 3) (HEX 5.41): AMP PN 734320-1

8 WITHOUT PACKAGING

9 PROFESSIONAL TYPE: ALL COMPONENTS ARE MACHINED

10 INDUSTRIAL TYPE: COLLAR IS INJECTED DIELECTRIC IS MOULDED

5-619151-3 (3 10)	5-619151-1 (3 9)	619151-4 (8 10)	619151-3 (2 10)	619151-2 (8 9)	619151-1 (2 9)	ITEM	NBR	DESCRIPTION	MATERIAL	PLATING
						3	1	FERRULE	SFCu	4
						2	1	MALE CONTACT	CuZn	5
						1	1	BNC PLUG	—	4
ORDER N°	ORDER N°	ORDER N°	ORDER N°	ORDER N°	ORDER N°					

THIS DRAWING IS A CONTROLLED DOCUMENT.
CE PLAN EST UN DOCUMENT CONTROLE.

DIMENSIONS: MM

TOLERANCES UNLESS OTHERWISE SPECIFIED: TOLERANCES NON SPECIFIEES (SUIV NB DE DECIMALES):
0 PLC /DEC:± 0.15
1 PLC /DEC:± 0.15
2 PLC /DEC:± 0.15
3 PLC /DEC:± –
4 PLC / DEC:± –
ANGLES ± 5'

MATERIAL MATIERE –
FINISH FINITION –

DWN/DESSINE 22JAN02 O. Gendre
CHK/VERIFIE 22JAN02 B. Rithener
APVD/APPROUVE –
PRODUCT SPEC SPEC PRODUIT —
APPLICATION SPEC SPEC. APPLICATION —
WEIGHT MASSE APPROX. —

tyco Electronics
Tyco Electronics Corporation
RF Team, Switzerland

NAME TITRE
BNC PLUG 75 OHM
FOR CABLE RA7000
–

SIZE FORMAT A2 | CAGE CODE 00779 | DRAWING NO No PLAN C-619151 | RESTRICTED TO —

CUSTOMER DRAWING/PLAN CLIENT UNIQUEMENT POUR REFERENCE | SCALE ECHELLE 1 0:1 | SHEET FEUILLE 1 OF DE 1 | REV A4

619151

AMP 1471-9 REV 31MAR2000

16JAN02 8:51am EW009995